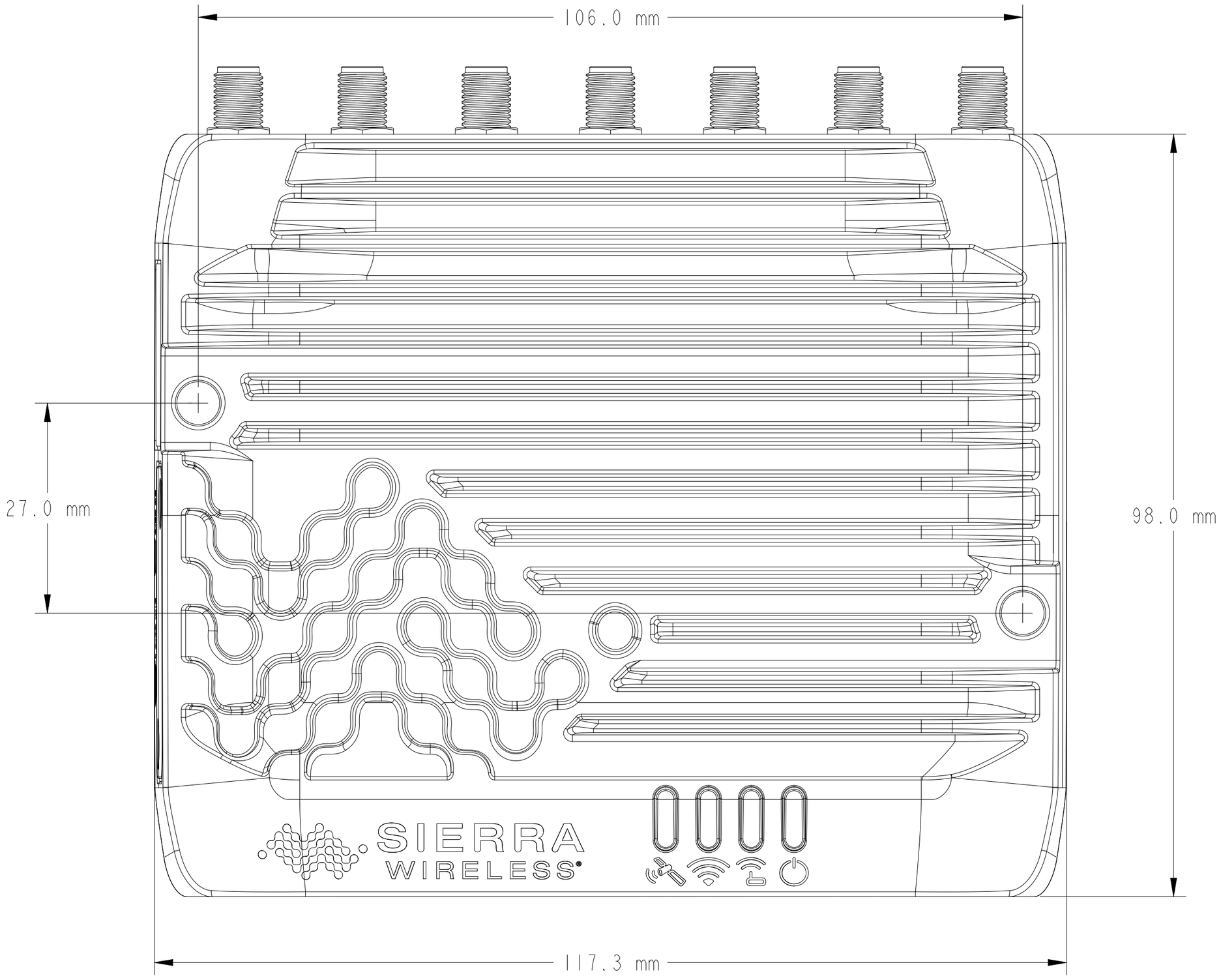
106.0 mm
27.0 mm
98.0 mm
117.3 mm
SIERRA WIRELESS

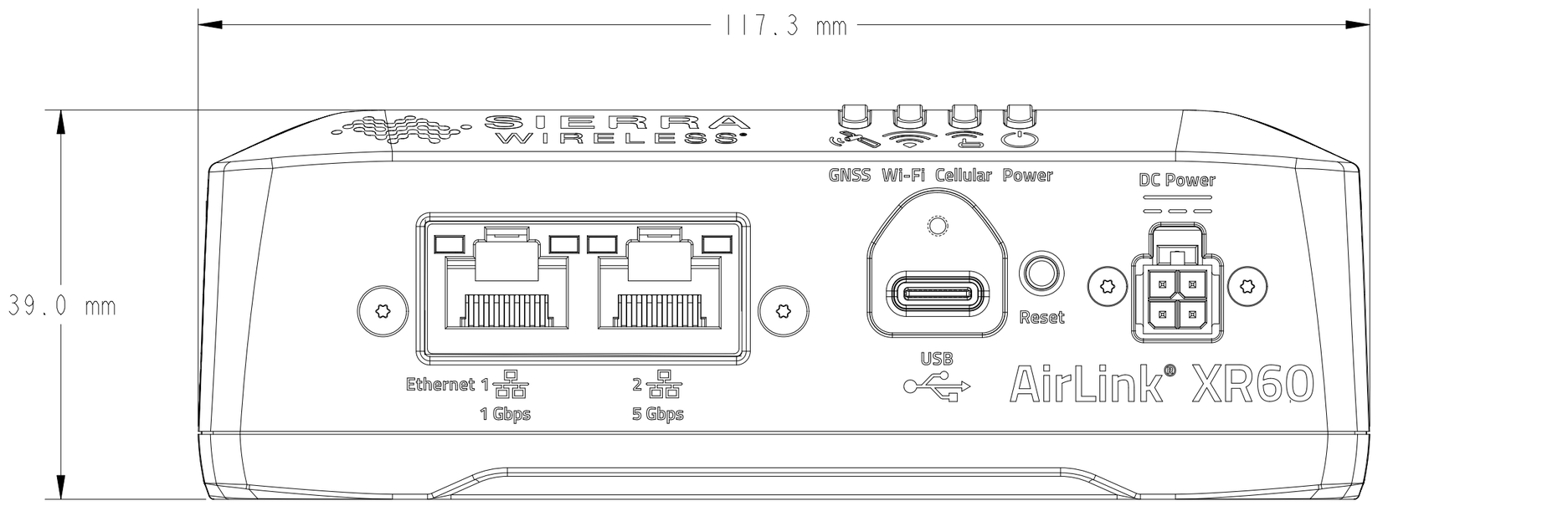
117.3 mm
39.0 mm
SIERRA WIRELESS
GNSS Wi-Fi Cellular Power
DC Power
Reset
USB
Ethernet 1
1 Gbps
2
5 Gbps
AirLink® XR60

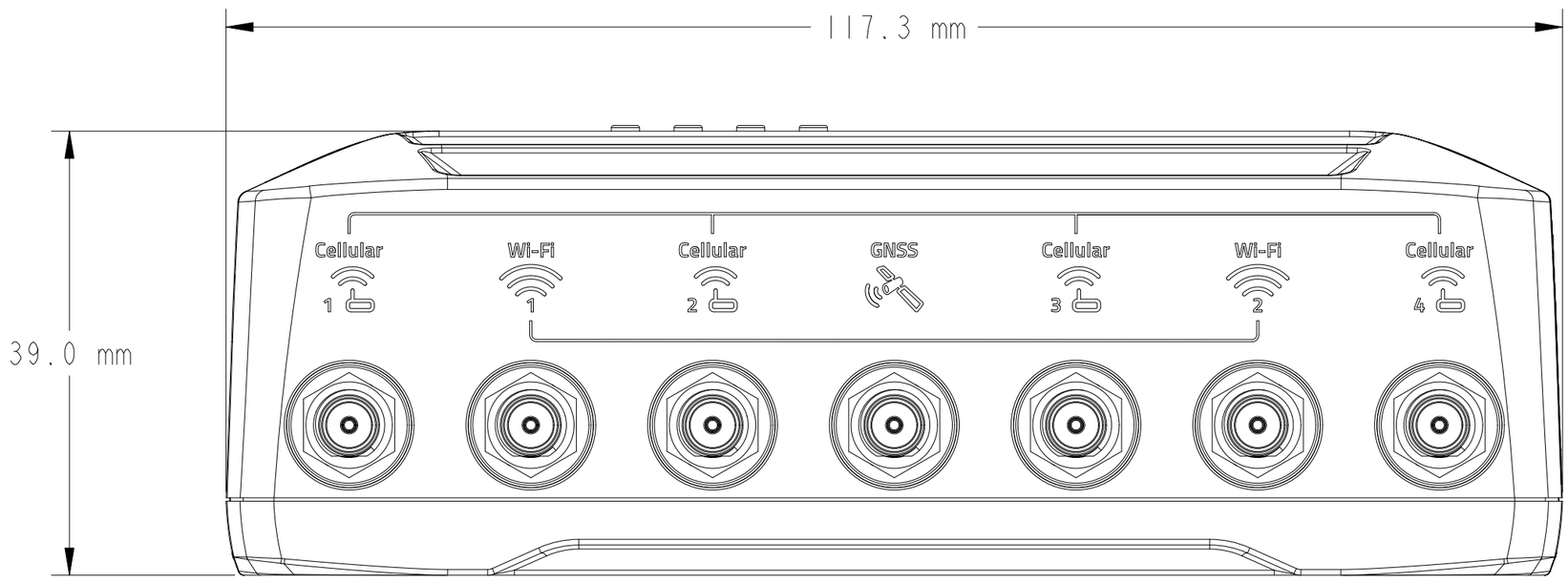
117.3 mm
39.0 mm
Cellular 1
Wi-Fi 1
Cellular 2
GNSS
Cellular 3
Wi-Fi 2
Cellular 4